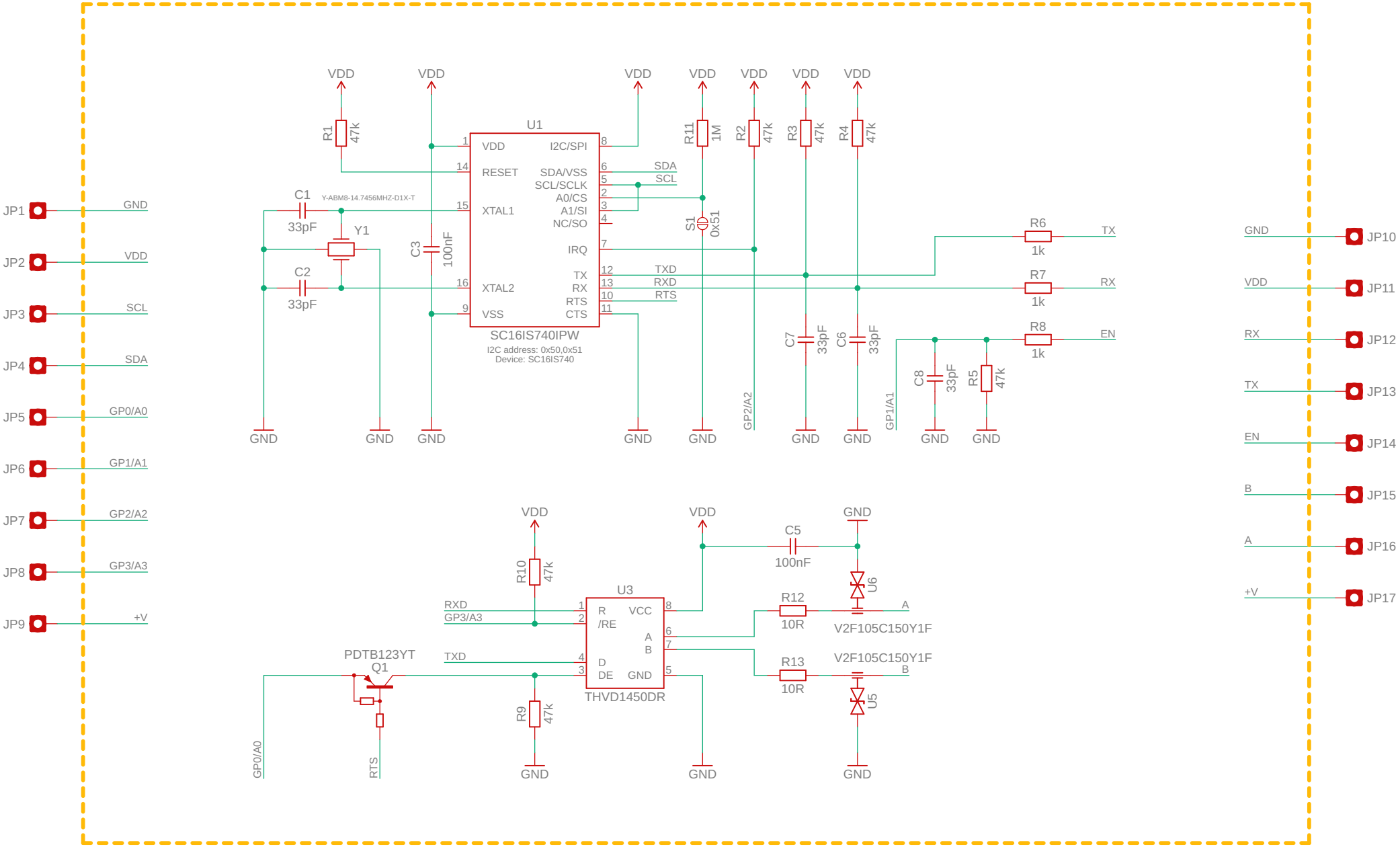

HARDWARIO
AGILE HARDWARE DEVELOPMENT
WWW.HARDWARIO.COM

CHESTER-X2

REVISION: 3.0

MODIFIED: 25.04.2024 13:02

1/1